BARCODE #: 4146

REV A

DWG. NO. 3000-0544

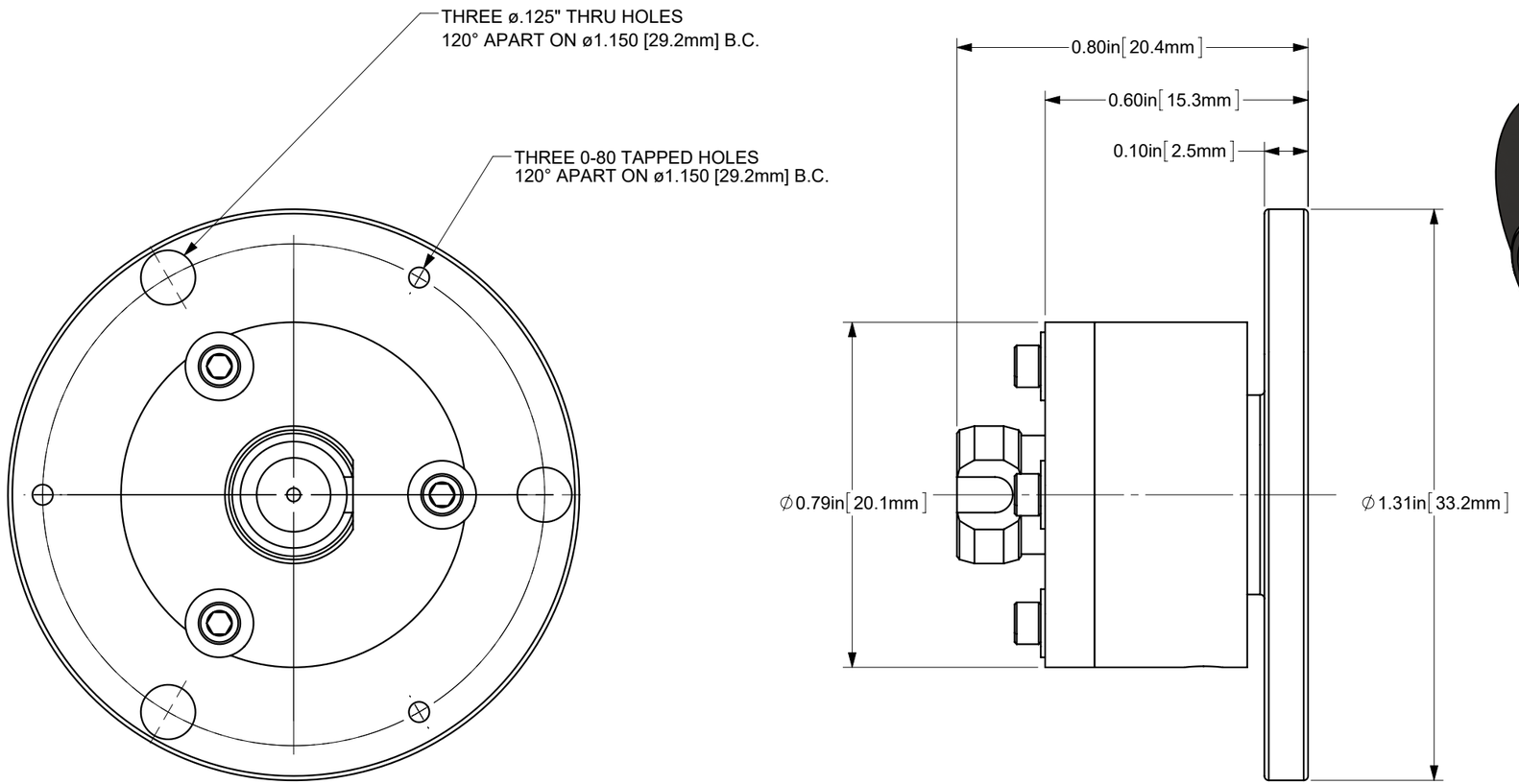

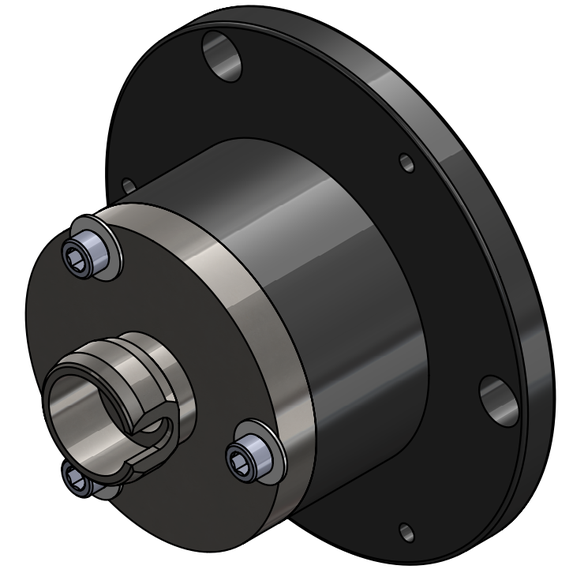

REV.	ECR REF#	DESCRIPTION	ENG. BY	DATE
A	N/A	ORIGINAL ISSUE	P.S.	02-JAN-2019

ALL DIMENSIONS ARE IN INCHES

DRAWN BY: P. Summers	DATE: 2/4/2019	
CHECKED BY:	DATE:	
M/S CHECKED BY:	DATE:	
APVD BY:	DATE:	
PROJECTION:		

UNLESS NOTED OTHERWISE, DIMENSIONS ARE IN INCHES, MILLIMETERS ARE IN SQUARE BRACKETS, AND TOLERANCES APPLY AS SHOWN BELOW.

INCHES		
BASIC DIMENSION	DECIMAL PLACES .XX	.XXX
BELOW 4	±.01	±.005
OVER 4	±.02	±.01

MILLIMETERS		
BASIC DIMENSION	DECIMAL PLACES .X	.XX
BELOW 101.6	±.25	±.10
OVER 101.6	±.50	±.20

ANGULAR DIMENSIONS		
BASIC DIMENSION	X	X.X
ALL ANGLES	±2.5°	±0.5°

SURFACE FINISH	MILLED	PROFILED
	125u	63u

CONFIDENTIAL
THIS PRINT IS THE EXCLUSIVE PROPERTY OF OZ OPTICS AND MUST BE RETURNED UPON REQUEST. UNAUTHORIZED USE, MANUFACTURE OR REPRODUCTION IN WHOLE OR IN PART IS PROHIBITED.

OZ OPTICS LIMITED
219 WESTBROOK ROAD
OTTAWA, ONTARIO
CANADA K0A 1L0
www.ozoptics.com

PART BARCODE #: 4146

DESC.: FIBER COLLIMATOR

PART NO.: HPUCO-23-400/700-P-10AC

REV: A

SIZE: B | DWG.# 3000-0544 | SHEET 1 OF 1 | SCALE: 3:1